Lisa Widget
Motherboard
Circuit
Sheet 3 of 3

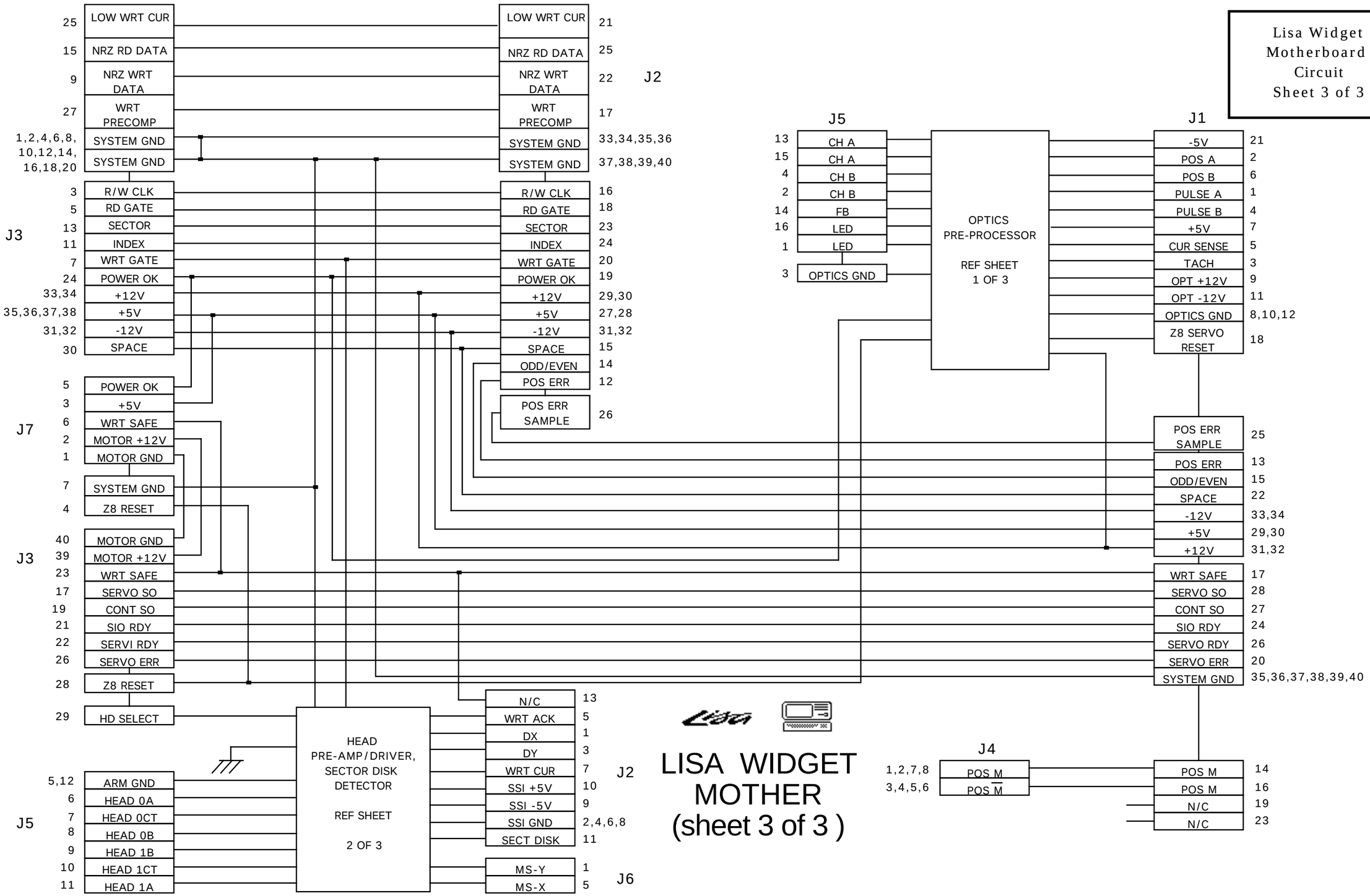

LISA WIDGET
MOTHER
(sheet 3 of 3)