NOTE: UNLESS OTHERWISE SPECIFIED

REV	ZONE	ECO #	REVISION	APPD	DATE
A		0065	INITIAL RELEASE		

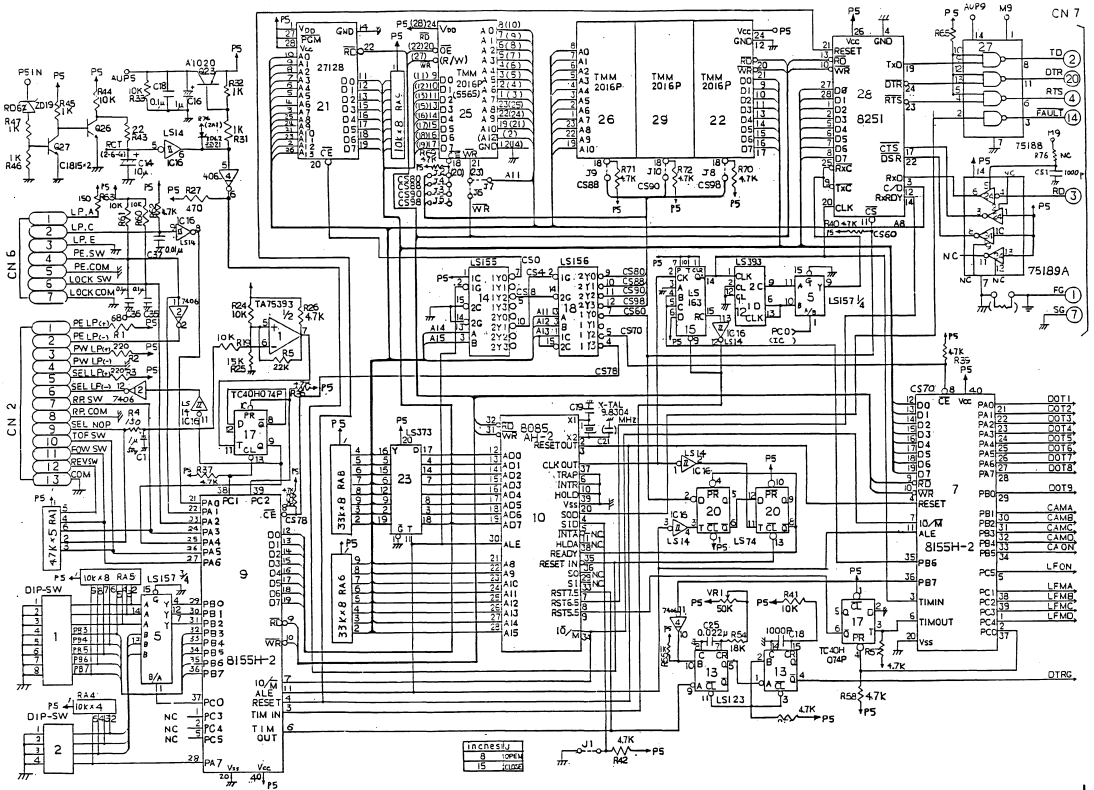

ITEM	QTY	PART NUMBER	DESCRIPTION

TOLERANCES UNLESS OTHERWISE SPECIFIED DIMENSIONS ARE IN INCHES
DECIMALS X ± —— XX ± —— XXX ± ——
ANGLES ± —— FRACTIONS ± —— DIMENSIONS IN PARENTHESES ARE IN MILLIMETERS
MATERIAL:
NEXT ASSY: FINISH:

DRAWN BY DATE
CHECKED BY DATE
APPROVED BY DATE
RELEASED BY DATE

apple computer inc.

TITLE: SCHEMATIC, MAIN LOGIC BOARD, IMAGEWRITER

SIZE D | DRAWING NUMBER 050-0089-A

SCALE: NONE | SHEET 1 OF 2

THIRD ANGLE PROJECTION
DO NOT SCALE DRAWING

050-0089-A | SH 1 | 2 OF 2

NOTE: UNLESS OTHERWISE SPECIFIED

REV	ZONE	ECO #	REVISION	APPD	DATE
			SEE SHEET 1		

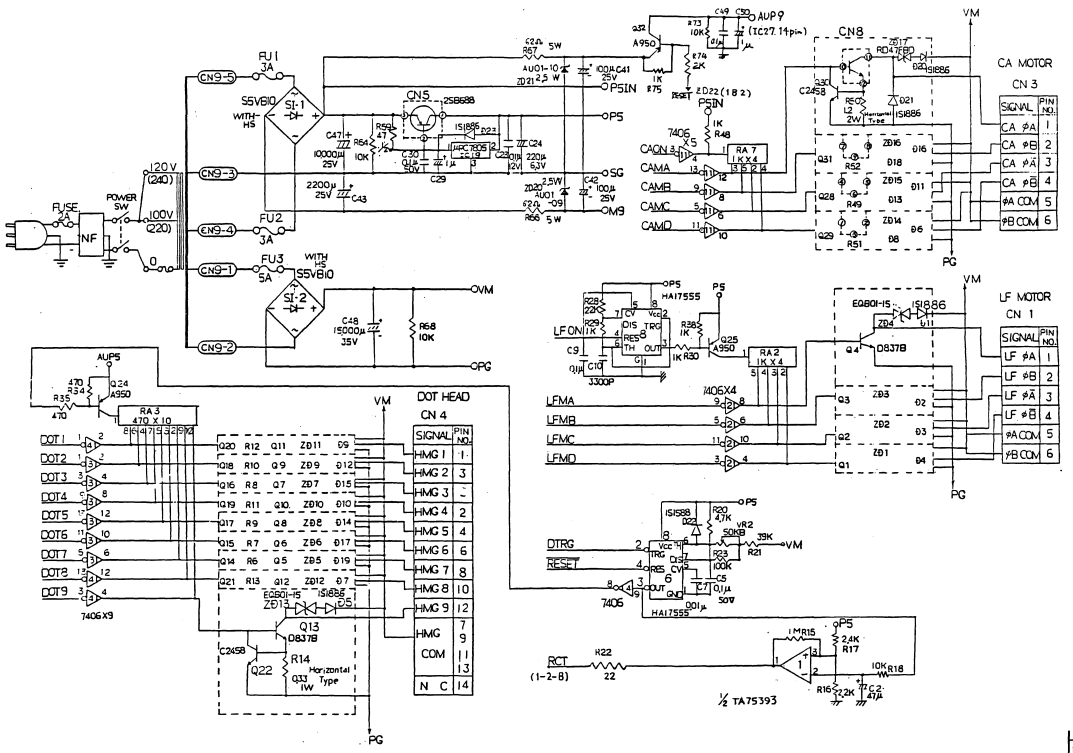

ITEM	QTY	PART NUMBER	DESCRIPTION

TOLERANCES UNLESS OTHERWISE SPECIFIED DIMENSIONS ARE IN INCHES.
DECIMALS X ± ___ XX ± ___ XXX ± ___
ANGLES XX.X ± ___
FRACTIONS ± ___
DIMENSIONS IN PARENTHESES ARE IN MILLIMETERS.

DRAWN BY DATE
CHECKED BY DATE
APPROVED BY DATE
RELEASED BY DATE

MATERIAL:
NEXT ASSY. FINISH:

apple computer inc.

TITLE SCHEMATIC, MAIN LOGIC BOARD, IMAGEWRITER

SIZE D DRAWING NUMBER 050-0089-A

SCALE: SHEET 2 OF 2

THIRD ANGLE PROJECTION DO NOT SCALE DRAWING